Submitted via E-Mail 09/27/2023

2779 Lantern Ln

PHOTOVOLTAIC GROUND MOUNT SYSTEM

27 MODULES - SYSTEM SIZE STC (10.800 kW DC / 7.830 kW AC)

2779 LANTERN LANE, EAGLEVILLE, PA 19403, USA (40.1245256, -75.4353914)

SYSTEM SUMMARY STC (10.800 kW DC / 7.830 kW AC)

STC DC: (27) 400W = 10.800 kW
STC AC: (27) 290W = 7.830 kW

- (27) HANWHA Q PEAK DUO BLK ML-G10 A PLUS 400W MODULES
- (27) ENPHASE IQ8PLUS-72-2-US (240V) MICROINVERTERS
- 3x BRANCHES OF 9 CONNECTED IN PARALLEL

GOVERNING CODES

ALL WORK SHALL CONFIRM TO THE FOLLOWING CODES

1. 2018 INTERNATIONAL BUILDING CODE
2. 2018 INTERNATIONAL RESIDENTIAL CODE
3. 2018 INTERNATIONAL FIRE CODE
4. 2017 NATIONAL ELECTRIC CODE

GENERAL NOTES

1) ALL PANELS, SWITCHES, ETC. SHALL HAVE SUFFICIENT GUTTER SPACE AND LUGS IN COMPLIANCE WITH UL REQUIREMENTS TO ACCOMMODATE CONDUCTORS SHOWN.
2) THIS SYSTEM WILL NOT BE INTERCONNECTED UNTIL APPROVAL FROM THE LOCAL JURISDICTION AND UTILITY IS OBTAINED.
3) ALL EXTERIOR ELECTRICAL DEVICES AND EQUIPMENT INCLUDING THOSE THAT ARE EXPOSED TO OUTSIDE ENVIRONMENT SHALL BE WEATHERPROOF AND SHALL BE LISTED BY 'UL' FOR THE TYPE OF APPLICATION AND 'UL' LABEL SHALL APPEAR ON ALL ELECTRICAL EQUIPMENT.
4) WIRING METHOD SHALL BE EMT ABOVE GROUND MOUNTED IN CONCEALED SPACES (UNLESS APPROVED OTHERWISE) AND SCHEDULE-40 PVC FOR BELOW GROUND INSTALLATIONS UNLESS NOTED OTHERWISE.
5) AN OSHA APPROVED LADDER PROVIDING ACCESS TO ALL PORTIONS OF THE ARRAY SHALL BE SECURED IN PRIOR TO REQUESTING INSPECTION.
6) IT IS THE CONTRACTOR'S RESPONSIBILITY TO INSTALL A SUPPLEMENTAL GROUNDING ELECTRODE CONDUCTOR IF NECESSARY.

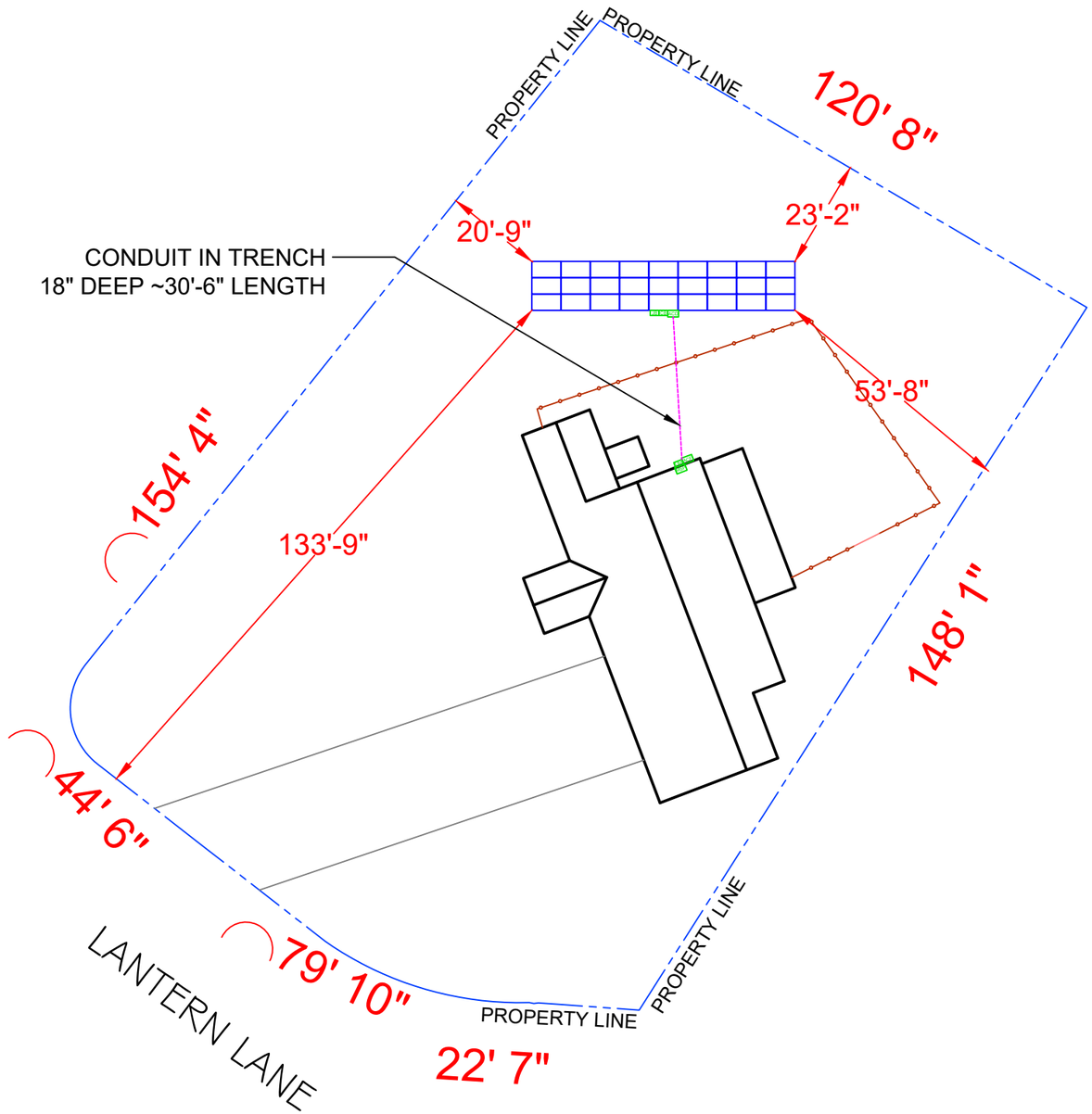

SITE PLAN & SAFETY PLAN

SCALE: 1/30"=1'-0"

LEGEND

- NEW PV MODULE
- DIMENSIONS
- PROPERTY LINE
- DRIVEWAY
- TRENCH
- FENCE
- GATE

MSP	MAIN SERVICE PANEL (EXISTING, 200A)	ACD	AC DISCONNECT UNFUSED (NEW)
UM	UTILITY METER (EXISTING)	ACF	AC DISCONNECT FUSED (NEW)
PM	PRODUCTION METER (N/A)	JB	JUNCTION BOX (NEW)
BAT	BATTERY (N/A)	AT	AUTO TRANSFORMER (N/A)
INV	(0) INVERTER (N/A)	SUB	SUBPANEL (N/A)
CB	COMBINER BOX (NEW)	DCD	DC DISCONNECT (N/A)
SM	SOLAREDGE METER (N/A)	DCC	DC COMBINER (N/A)
BLP	BACKUP LOAD PANEL (N/A)	EE	EXISTING EQUIPMENT

SHEET INDEX

PV-1	COVER PAGE
PV-2	GROUNG MOUNT PLAN WITH MODULES
PV-3	RACKING DETAIL
PV-3.1	ATTACHMENT DETAIL
PV-4	SINGLE LINE DIAGRAM
PV-5	WIRING CALCULATION
PV-6	PLACARDS
PV-7+	EQUIPMENT SPECIFICATION

AHJ: LOWER PROVIDENCE
UTILITY: PECO ENERGY CO

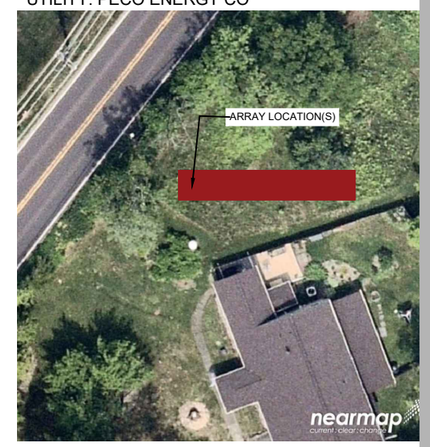

HOUSE PHOTO

SCALE: NTS

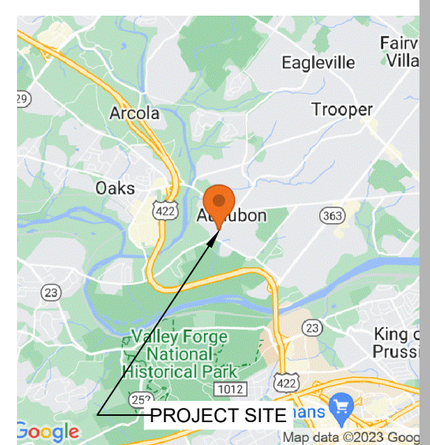

VICINITY MAP

SCALE: NTS

Superior Solar Design LLC

CONTRACTOR: SUPERIOR SOLAR DESIGN LLC
ADDRESS: 314 S HENDERSON RD SUITE G #350, KING OF PRUSSIA, PA 19406, USA
PHONE: W# 610.456.7069
M# 610.213.6154
CONTRACTOR LICENSE #: PA 109801 AND NJ13VHO8849800
EMAIL ID #: ddavis@superiorsolardesign.com

REVISIONS

DESCRIPTION	DATE	REV

SIGNATURE & SEAL

HOMEOWNER INFO

LAURE RITTIE
2779 LANTERN LANE,
EAGLEVILLE, PA 19403, USA

APN: 430006835007
EMAIL: laure.rittie@gmail.com
PHONE: 17348833574

SHEET NAME

COVER PAGE

SHEET SIZE

ANSI B
11" X 17"

SHEET NUMBER

PV-1

MODULE AREA & WEIGHT CALCULATIONS

PANEL TYPES (COUNT, AREA, WEIGHT):
- (27x) HANWHA Q PEAK DUO BLK ML-G10 A PLUS 400W (74.0" x 41.1", 48.5 LB)

MICRO-INVERTER TYPES (COUNT, WEIGHT):
- (27x) ENPHASE IQ8PLUS-72-2-US (240V) (2.38 LB)

MOUNTING SYSTEM WEIGHT/MODULE: 1.5 LB

NEW PANELS:
- TOTAL AREA: (27) 74.0" x 41.1" = 570 SF
- TOTAL WEIGHT: (27) 48.5 + (27) 2.4 + (27) 1.5 = 1414 LB
- DISTRIBUTED LOAD: 1414 LB / 570 SF = 2.48 PSF

BILL OF MATERIALS		
EQUIPMENT	QTY	DESCRIPTION
SOLAR PV MODULES	27	HANWHA Q PEAK DUO BLK ML-G10 A PLUS 400W
MICRO INVERTERS	27	ENPHASE IQ8PLUS-72-2-US (240V)
JUNCTION BOX (AC)	1	JUNCTION BOX 600V, NEMA 3R UL LISTED
LOAD CENTER (AC)	1	ENPHASE IQ COMBINER 4(X-IQ-AM1-240-4)
AC DISCONNECT	1	PV VISIBLE LOCKABLE LABELED DISCONNECT (60A UNFUSED 1PH 240VAC)
	1	PV VISIBLE LOCKABLE LABELED DISCONNECT (60A FUSED WITH (2) 50A FUSES 1PH 240VAC)
XR-100-132A	27	XR100, RAIL 132" CLEAR
UFO-CL-01-A1	108	UNIVERSAL MODULE CLAMP, CLEAR
UFO-STP-30MM-M1	54	STOPPER SLEEVE,30MM, MILL
XR-LUG-03-A1	1	GROUNDING LUG
70-0300-SGA	16	SGA TOP CAP AT 3"
GM-BRC3-01-M1	54	GROUND MOUNT BONDED RAIL CONNECTOR - 3"

GROUND MOUNT DESCRIPTION		
ARRAY	ARRAY TILT	AZIMUTH
#1	30°	180°

DESIGN CRITERIA
- EXPOSURE CATEGORY = C
- WIND SPEED = 120 MPH
- SNOW LOAD = 30 PSF

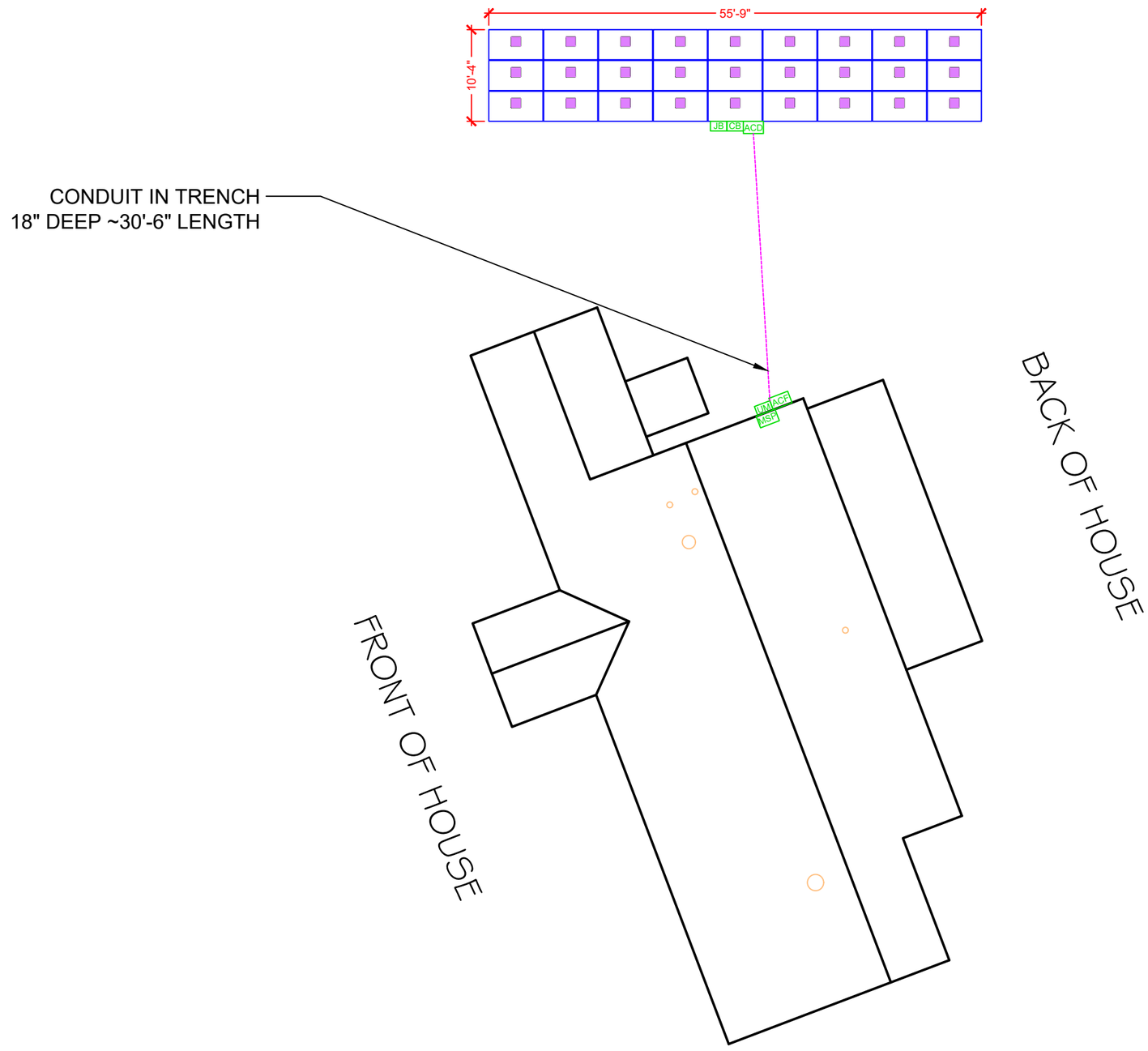

LEGEND

PV MODULE
MICRO-INVERTER
DIMENSIONS
TRENCH

MSP	MAIN SERVICE PANEL (EXISTING, 200A)	ACD	AC DISCONNECT UNFUSED (NEW)
UM	UTILITY METER (EXISTING)	ACF	AC DISCONNECT FUSED (NEW)
PM	PRODUCTION METER (N/A)	JB	JUNCTION BOX (NEW)
BAT	BATTERY (N/A)	AT	AUTO TRANSFORMER (N/A)
INV	(0) INVERTER (N/A)	SUB	SUBPANEL (N/A)
CB	COMBINER BOX (NEW)	DCD	DC DISCONNECT (N/A)
SM	SOLAREDGE METER (N/A)	DCC	DC COMBINER (N/A)
BLP	BACKUP LOAD PANEL (N/A)	EE	EXISTING EQUIPMENT

GROUND MOUNT PLAN WITH MODULES

LANTERN LANE

SCALE: 1/14"=1'-0"

N

Superior Solar Design LLC

CONTRACTOR: SUPERIOR SOLAR DESIGN LLC
ADDRESS: 314 S HENDERSON RD SUITE G #350, KING OF PRUSSIA, PA 19406, USA
PHONE: W# 610.456.7069
M# 610.213.6154
CONTRACTOR LICENSE #: PA 109801 AND NJ13VHO8849800
EMAIL ID #: ddavis@superiorsolardesign.com

REVISIONS

DESCRIPTION	DATE	REV

SIGNATURE & SEAL

HOMEOWNER INFO

LAURE RITTIE
2779 LANTERN LANE,
EAGLEVILLE, PA 19403, USA

APN: 430006835007
EMAIL: laure.rittie@gmail.com
PHONE: 17348833574

SHEET NAME
GROUND MOUNT PLAN WITH MODULES

SHEET SIZE
ANSI B
11" X 17"

SHEET NUMBER
PV-2

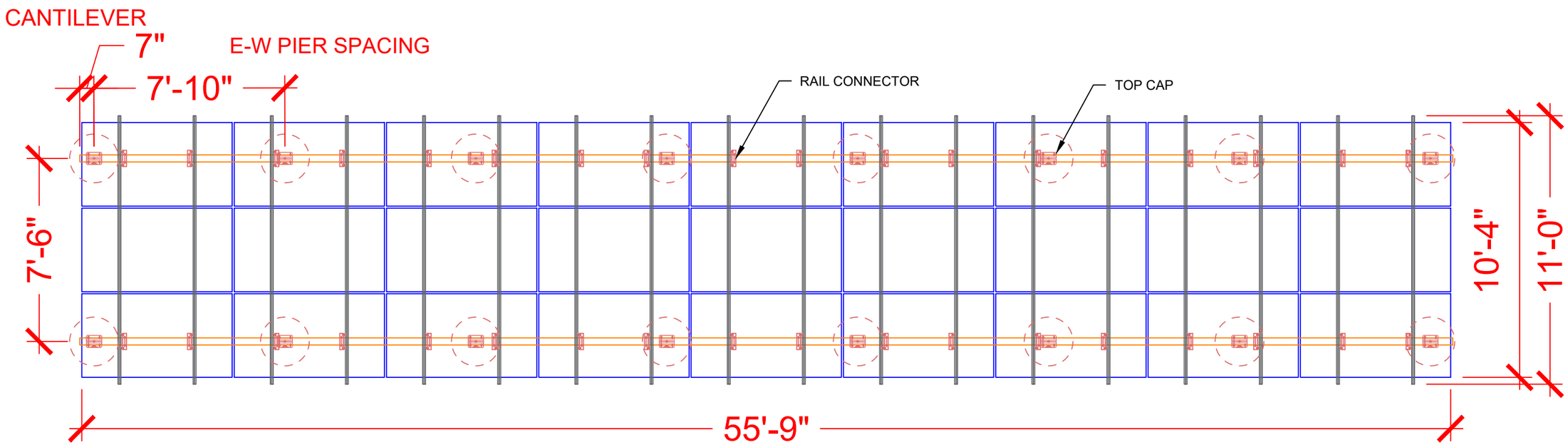

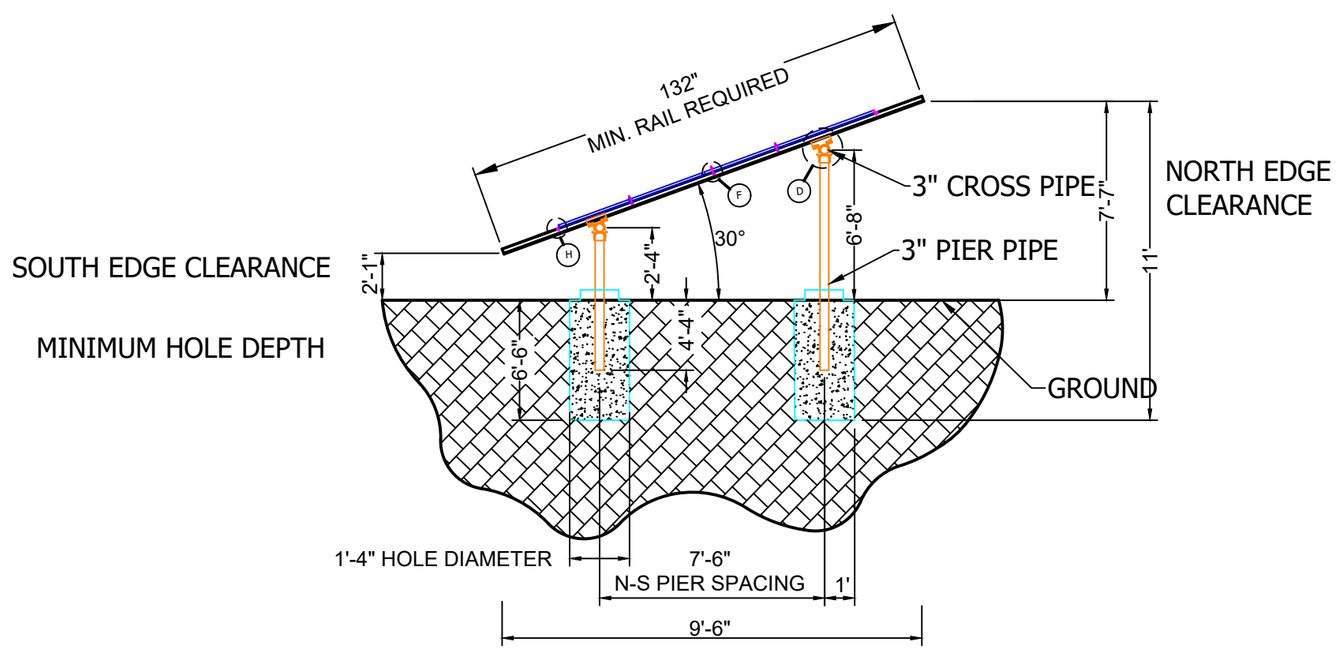

RACKIING DETAIL

SCALE: NTS

Superior Solar Design LLC

CONTRACTOR: SUPERIOR SOLAR DESIGN LLC
ADDRESS: 314 S HENDERSON RD SUITE G #350, KING OF PRUSSIA, PA 19406, USA
PHONE: W# 610.456.7069
M# 610.213.6154
CONTRACTOR LICENSE #: PA 109801 AND NJ13VHO8849800
EMAIL ID #: ddavis@superiorsolardesign.com

REVISIONS

DESCRIPTION	DATE	REV

SIGNATURE & SEAL

HOMEOWNER INFO

LAURE RITTIE
2779 LANTERN LANE,
EAGLEVILLE, PA 19403, USA

APN: 430006835007
EMAIL: laure.rittie@gmail.com
PHONE: 17348833574

SHEET NAME

RACKING DETAIL

SHEET SIZE

ANSI B
11" X 17"

SHEET NUMBER

PV-3

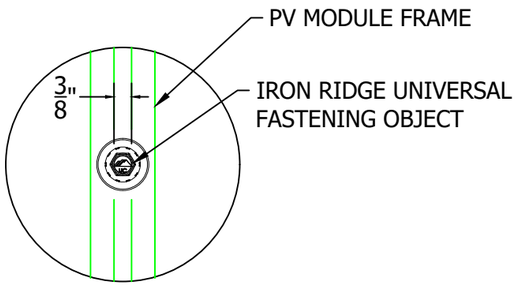

E DETAIL, MID CLAMP PLAN
Scale: 6" = 1'-0"

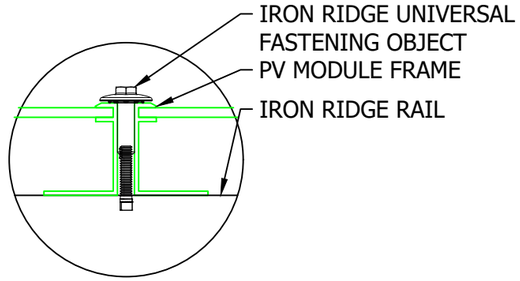

F DETAIL, MID CLAMP FRONT
Scale: 6" = 1'-0"

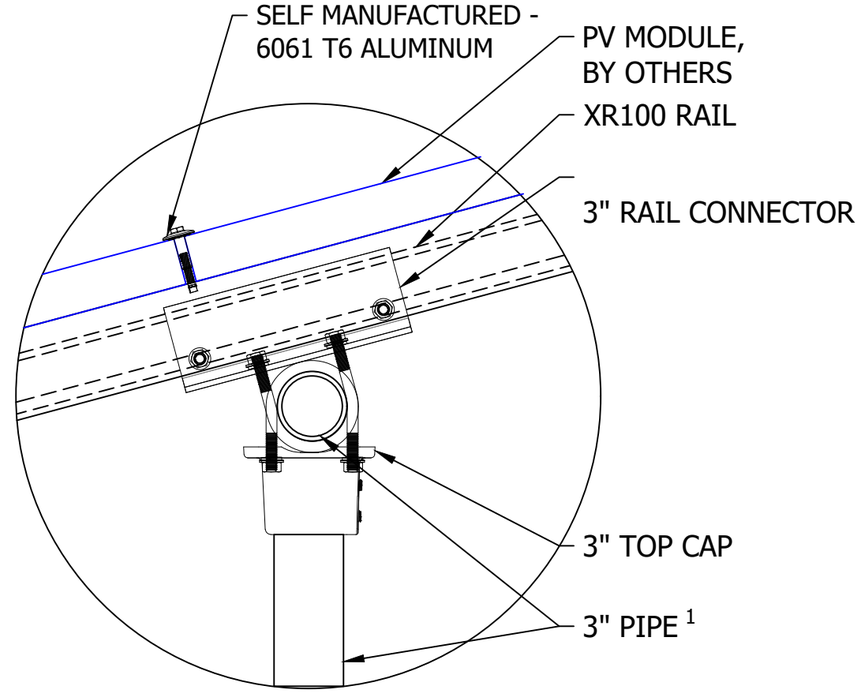

D PIPE FITTINGS DETAIL
Scale: 3" = 1'-0"

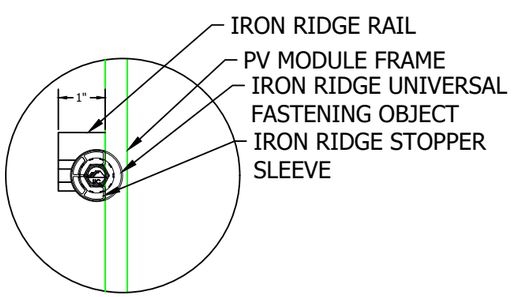

G DETAIL, END CLAMP PLAN
Scale: 6" = 1'-0"

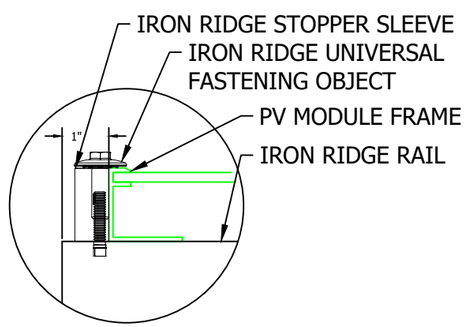

H DETAIL, END CLAMP FRONT
Scale: 6" = 1'-0"

ATTACHMENT DETAIL

SCALE: NTS

Superior Solar Design LLC

CONTRACTOR: SUPERIOR SOLAR DESIGN LLC
ADDRESS: 314 S HENDERSON RD SUITE G #350, KING OF PRUSSIA, PA 19406, USA
PHONE: W# 610.456.7069
M# 610.213.6154
CONTRACTOR LICENSE #: PA 109801 AND NJ13VHO8849800
EMAIL ID #: ddavis@superiorsolardesign.com

REVISIONS

DESCRIPTION	DATE	REV

SIGNATURE & SEAL

HOMEOWNER INFO

LAURE RITTIE
2779 LANTERN LANE,
EAGLEVILLE, PA 19403, USA

APN: 430006835007
EMAIL: laure.rittie@gmail.com
PHONE: 17348833574

SHEET NAME

ATTACHMENT DETAIL

SHEET SIZE

ANSI B
11" X 17"

SHEET NUMBER

PV-3.1

SYSTEM SUMMARY STC (10.800 kW DC / 7.830 kW AC)

STC DC: (27) 400W = 10.800 kW
STC AC: (27) 290W = 7.830 kW

- (27) HANWHA Q PEAK DUO BLK ML-G10 A PLUS 400W MODULES
- (27) ENPHASE IQ8PLUS-72-2-US (240V) MICROINVERTERS
- 3x BRANCHES OF 9 CONNECTED IN PARALLEL

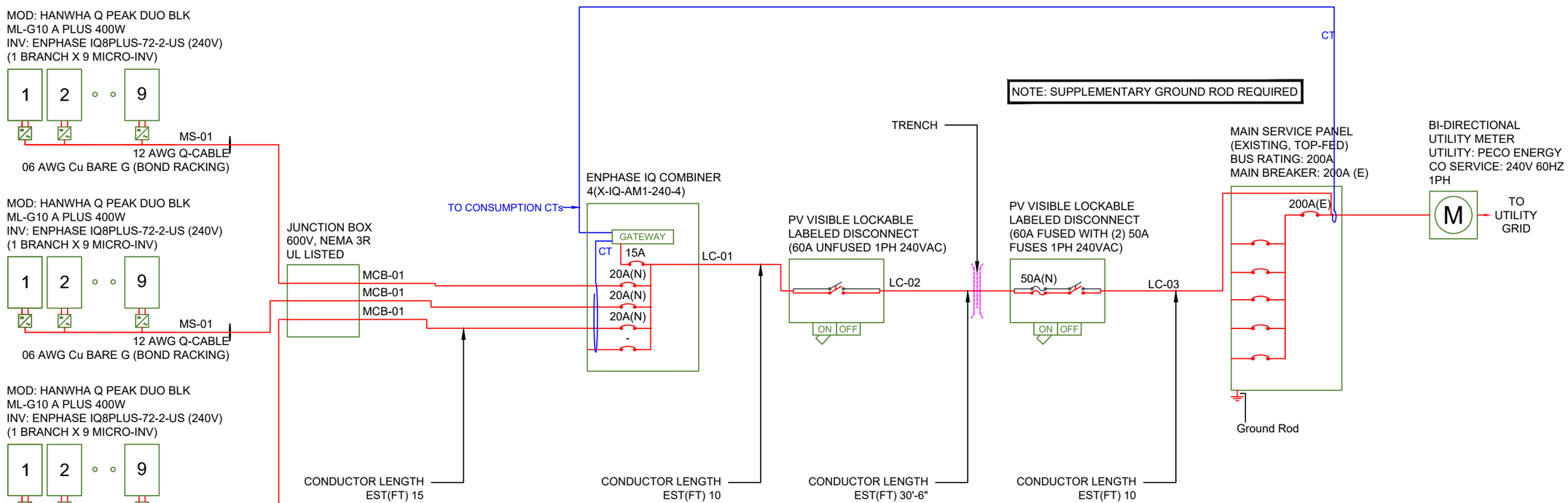

AC wire details

Wire	Min Ampacity	Live	Neutral	Ground	Min EMT	Min PVC	Min RMC
MS-01	13.61A	12 AWG (Q-Cable)	-	06 AWG BARE (NOT IN CONDUIT)	-	-	-
MCB-01	13.61A	(2) 10 AWG THWN-2	-	10 AWG THWN-2	1/2 in	1/2 in	1/2 in
LC-01	40.84A	(2) 08 AWG THWN-2	08 AWG THWN-2	10 AWG THWN-2	3/4 in	3/4 in	3/4 in
LC-02	40.84A	(2) 08 AWG THWN-2	08 AWG THWN-2	10 AWG THWN-2	3/4 in	3/4 in	3/4 in
LC-03	40.84A	(2) 06 AWG THWN-2	06 AWG THWN-2	10 AWG THWN-2	3/4 in	3/4 in	3/4 in

ELECTRICAL NOTES

1) ALL GROUNDING TO COMPLY WITH NEC 690.47.
2) ROOFTOP CONDUIT SHALL BE LOCATED MIN. 7/8" ABOVE ROOF SURFACE.
3) ALL TERMINALS SHALL BE MIN. 75°C RATED.
4) IQ GATEWAY BREAKER DETERMINED AT FACTORY BY MANUFACTURER (10A or 15A).
5) FOR IQ GATEWAY: USE SINGLE CT FOR PV PRODUCTION (L1 FROM ALL PV BRANCH CIRCUITS). USE DOUBLE CTs FOR CONSUMPTION (L1 AND L2 FEEDING MSP MAIN BREAKER, SERVICE SIDE).
6) AC DISCONNECT LOCATED WITHIN 10' OR LESS FROM UTILITY METER
7) ALL ENPHASE Q-CABLE RUNS WILL TERMINATE AT OR WITHIN 1' OF A ROOFTOP J-BOX.

INTERCONNECTION 120% RULE
(MAIN PANEL)

INTERCONNECTION
120% RULE
NOT APPLICABLE

LINE-SIDE TAP DOES NOT AFFECT
MAIN PANEL

EXTREME CASE MODULE OUTPUT
(Hanwha Q Peak Duo BLK ML-G10 A Plus 400W)

Isc(25°C) = 11.14A, Tisc = 0.040A/°C
Isc(T) = Isc(25°C) + [Tisc x (T-25°C)]
Isc(-15°C) = 9.54A, Isc(32°C) = 11.42A

Voc(25°C) = 45.30V, Tvoc = -0.270V/°C
Voc(T) = Voc(25°C) + [Tvoc x (T-25°C)]
Voc(-15°C) = 56.10V, Voc(32°C) = 43.41V

ELECTRICAL SINGLE LINE DIAGRAM

SCALE: NTS

Superior Solar Design LLC

CONTRACTOR: SUPERIOR SOLAR DESIGN LLC
ADDRESS: 314 S HENDERSON RD SUITE G #350, KING OF PRUSSIA, PA 19406, USA
PHONE: W# 610.456.7069
M# 610.213.6154
CONTRACTOR LICENSE #: PA 109801 AND NJ13VHO8849800
EMAIL ID #: ddavis@superiorsolardesign.com

REVISIONS

DESCRIPTION	DATE	REV

SIGNATURE & SEAL

HOMEOWNER INFO

LAURE RITTIE
2779 LANTERN LANE,
EAGLEVILLE, PA 19403, USA

APN: 430006835007
EMAIL: laure.rittie@gmail.com
PHONE: 17348833574

SHEET NAME
SINGLE LINE DIAGRAM

SHEET SIZE
ANSI B
11" X 17"

SHEET NUMBER
PV-4

SYSTEM SUMMARY STC (10.800 kW DC / 7.830 kW AC)

STC DC: (27) 400W = 10.800 kW
STC AC: (27) 290W = 7.830 kW

- (27) HANWHA Q PEAK DUO BLK ML-G10 A PLUS 400W MODULES
- (27) ENPHASE IQ8PLUS-72-2-US (240V) MICROINVERTERS
- 3x BRANCHES OF 9 CONNECTED IN PARALLEL

AC wire details

WireID	#Modules	Nominal Voltage	Backfeed *1.25 /cond. set	Min OCPD	Total Power	Conductor sets	ccConductors /conduit	Expected max temp	Adjusted ampacity (ampacity x temp derate x conduit fill derate)	Conductor & neutral size	EGC size (Cu)	Conductor metal	Max length	V drop	Min EMT size	Min PVC size	Min RMC size
MS-01	9	240 V	13.61 A	20 A	2.6 kW	1	2	32	25 x 0.94 x1.00 = 23.50 A	12 AWG (Q-Cable)	06 AWG BARE (NOT IN CONDUIT)	Cu	50 ft	0.78 %	-	-	-
MCB-01	9	240 V	13.61 A	20 A	2.6 kW	1	2	32	35 x 0.94 x 1.00 = 32.90 A	10 AWG THWN-2	10 AWG THWN-2	Cu	50 ft	0.47 %	1/2 in	1/2 in	1/2 in
LC-01	27	240 V	40.84 A	50 A	7.8 kW	1	2	32	50 x 0.94 x 1.00 = 47.0 A	08 AWG THWN-2	10 AWG THWN-2	Cu	10 ft	0.11 %	3/4 in	3/4 in	3/4 in
LC-02	27	240 V	40.84 A	50 A	7.8 kW	1	2	32	50 x 0.94 x 1.00 = 47.0 A	08 AWG THWN-2	10 AWG THWN-2	Cu	30 ft 6in	0.49 %	3/4 in	3/4 in	3/4 in
LC-03	27	240 V	40.84 A	60 A	7.8 kW	1	2	32	65 x 0.94 x 1.00 = 61.10 A	06 AWG THWN-2	10 AWG THWN-2	Cu	10 ft	0.11 %	3/4 in	3/4 in	3/4 in

INTERCONNECTION 120% RULE
(MAIN PANEL)

INTERCONNECTION
120% RULE
NOT APPLICABLE

LINE-SIDE TAP DOES NOT AFFECT
MAIN PANEL

EXTREME CASE MODULE OUTPUT
(Hanwha Q Peak Duo BLK ML-G10 A Plus 400W)

Isc(25°C) = 11.14A, Tisc = 0.040A/°C
Isc(T) = Isc(25°C) + [Tisc x (T-25°C)]
Isc(-15°C) = 9.54A, Isc(32°C) = 11.42A

Voc(25°C) = 45.30V, Tvoc = -0.270V/°C
Voc(T) = Voc(25°C) + [Tvoc x (T-25°C)]
Voc(-15°C) = 56.10V, Voc(32°C) = 43.41V

ELECTRICAL NOTES

1) ALL EQUIPMENT TO BE LISTED BY UL OR OTHER NRTL, AND LABELED FOR ITS APPLICATION.
2) ALL CONDUCTORS SHALL BE COPPER, RATED FOR 600V AND 90°C WET ENVIRONMENT.
3) WIRING, CONDUIT, AND RACEWAYS MOUNTED ON ROOFTOPS SHALL BE ROUTED DIRECTLY TO, AND LOCATED AS CLOSE AS POSSIBLE TO THE NEAREST RIDGE, HIP, OR VALLEY.
4) WORKING CLEARANCES AROUND ALL NEW AND EXISTING ELECTRICAL EQUIPMENT SHALL COMPLY WITH NEC 110.26.
5) DRAWINGS INDICATE THE GENERAL ARRANGEMENT OF SYSTEMS. CONTRACTOR SHALL FURNISH ALL NECESSARY OUTLETS, SUPPORTS, FITTINGS AND ACCESSORIES TO FULFILL APPLICABLE CODES AND STANDARDS.
6) WHERE SIZES OF JUNCTION BOXES, RACEWAYS, AND CONDUITS ARE NOT SPECIFIED, THE CONTRACTOR SHALL SIZE THEM ACCORDINGLY.
7) ALL WIRE TERMINATIONS SHALL BE APPROPRIATELY LABELED AND READILY VISIBLE.
8) MODULE GROUNDING CLIPS TO BE INSTALLED BETWEEN MODULE FRAME AND MODULE SUPPORT RAIL, PER THE GROUNDING CLIP MANUFACTURER'S INSTRUCTION.
9) MODULE SUPPORT RAIL TO BE BONDED TO CONTINUOUS COPPER G.E.C.VIA WEEB LUG OR ILSCO GBL-4DBT LAY-IN LUG.
10) PV EQUIPMENT SHALL BE DESIGNED AND INSTALLED IN ACCORDANCE WITH NEC 690.
11) EXACT LOCATION OF AUXILIARY GROUNDING TO BE DETERMINED AT TIME OF INSTALL.
12) EXISTING WIRES MUST BE REPLACED IF SMALLER THAN LISTED MINIMUM SIZES PER NEC 310.15(B)(16).
13) IQ GATEWAY BREAKER DETERMINED AT FACTORY BY MANUFACTURER (10A or 15A).
14) FOR IQ GATEWAY: USE SINGLE CT FOR PV PRODUCTION (L1 FROM ALL PV BRANCH CIRCUITS). USE DOUBLE CTs FOR CONSUMPTION (L1 AND L2 FEEDING MSP MAIN BREAKER, SERVICE SIDE).
15) AC DISCONNECT LOCATED WITHIN 10' OR LESS FROM UTILITY METER
16) ALL ENPHASE Q-CABLE RUNS WILL TERMINATE AT OR WITHIN 1' OF A ROOFTOP J-BOX.

WIRING CALCULATIONS

SCALE: NTS

Superior Solar Design LLC

CONTRACTOR: SUPERIOR SOLAR DESIGN LLC
ADDRESS: 314 S HENDERSON RD SUITE G #350, KING OF PRUSSIA, PA 19406, USA
PHONE: W# 610.456.7069
M# 610.213.6154
CONTRACTOR LICENSE #: PA 109801 AND NJ13VHO8849800
EMAIL ID #: ddavis@superiorsolardesign.com

REVISIONS

DESCRIPTION	DATE	REV

SIGNATURE & SEAL

HOMEOWNER INFO

LAURE RITTIE
2779 LANTERN LANE,
EAGLEVILLE, PA 19403, USA

APN: 430006835007
EMAIL: laure.rittie@gmail.com
PHONE: 17348833574

SHEET NAME
WIRING CALCULATIONS

SHEET SIZE
ANSI B
11" X 17"

SHEET NUMBER
PV-5

⚠ WARNING

ELECTRICAL SHOCK HAZARD

TERMINALS ON BOTH LINE AND LOAD SIDES MAY BE ENERGIZED IN THE OPEN POSITION

LABEL LOCATION: INVERTERS, AC DISCONNECTS, AC COMBINER BOXES, AC JUNCTION BOXES
CODE REF: NEC 2017 - 690.13(B)

⚠ WARNING ⚠

ELECTRICAL SHOCK HAZARD

IF GROUND FAULT IS INDICATED ALL NORMALLY GROUNDED CONDUCTORS MAY BE UNGROUNDED AND ENERGIZED

LABEL LOCATION: AC DISCONNECTS, AC COMBINER BOXES, SERVICE PANELS
CODE REF: NEC 2017 - 690.5(C)

PV SYSTEM DISCONNECT

MAXIMUM AC OPERATING CURRENT: 32.67 AMPS
NOMINAL OPERATING AC VOLTAGE: 240.0 VAC

LABEL LOCATION: INTERCONNECTION Placard (MSP BACKFEED BREAKER OR TAP BOX IF LINE SIDE TAP), AC DISCONNECTS
CODE REF: NEC 2017 - 690.54

PHOTOVOLTAIC SYSTEM UTILITY DISCONNECT SWITCH

LABEL LOCATION: AC DISCONNECTS FOR UTILITY ACCESS
CODE REF: UTILITY

PHOTOVOLTAIC SYSTEM METER

LABEL LOCATION: PV PRODUCTION METER
CODE REF: NEC 2017 - 690.4(B)

⚠ WARNING

PHOTOVOLTAIC SYSTEM COMBINER PANEL

DO NOT ADD LOADS

LABEL LOCATION: AC COMBINER BOX
CODE REF: NEC 2017 - 690.12(B)

⚠ CAUTION

PHOTOVOLTAIC SYSTEM CIRCUIT IS BACKFED

LABEL LOCATION: INTERCONNECTION Placard (MSP BACKFEED BREAKER OR TAP BOX IF LINE SIDE TAP)
CODE REF: NEC 2017 - 705.2(4)

RAPID SHUTDOWN SWITCH FOR SOLAR PV SYSTEM

LABEL LOCATION: MSP
CODE REF: NEC 2017 - 690.56(C)(3)

⚠ CAUTION

DUAL POWER SOURCE SECOND SOURCE IS PHOTOVOLTIC

LABEL LOCATION: MSP, UTILITY METER (IF SEPARATE)
CODE REF: UTILITY

SOLAR PV SYSTEM EQUIPPED WITH RAPID SHUTDOWN

TURN RAPID SHUTDOWN SWITCH TO THE "OFF" POSITION TO SHUT DOWN PV SYSTEM AND REDUCE SHOCK HAZARD IN THE ARRAY.

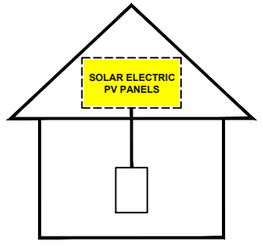

LABEL LOCATION: INTERCONNECTION POINT (MSP OR AC DISCONNECT IF LINE SIDE TAP)
CODE REF: NEC 2017 - 690.12, NEC 2017 - 690.56(C)

WARNING

A GENERATION SOURCE IS CONNECTED TO THE SUPPLY (UTILITY) SIDE OF THE MAIN SERVICE DISCONNECT. FOLLOW THE PROPER LOCK-OUT/TAG-OUT PROCEDURES TO ENSURE THE PHOTOVOLTAIC SYSTEM UTILITY DISCONNECT SWITCH IS OPENED PRIOR TO PERFORMING WORK ON THIS DEVICE

LABEL LOCATION: MSP JUNCTION BOX (FOR LINE SIDE TAP)
CODE REF: UTILITY

NOTES AND SPECIFICATIONS

1) SIGNS AND LABELS SHALL MEET THE REQUIREMENTS OF NEC 110.21(B), UNLESS SPECIFIC INSTRUCTIONS ARE REQUIRED BY SECTION 690, OR IF REQUESTED BY THE LOCAL AHJ.
2) SIGNS AND LABELS SHALL ADEQUATELY WARN OF HAZARDS USING EFFECTIVE WORDS, COLORS AND SYMBOLS.
3) LABELS SHALL BE PERMANENTLY AFFIXED TO THE EQUIPMENT OR WIRING METHOD AND SHALL NOT BE HAND WRITTEN.
4) LABEL SHALL BE OF SUFFICIENT DURABILITY TO WITHSTAND THE ENVIRONMENT INVOLVED.
5) SIGNS AND LABELS SHALL COMPLY WITH ANSI Z535.4 - 2011, PRODUCT SAFETY SIGNS AND LABELS, UNLESS OTHERWISE SPECIFIED.
6) DO NOT COVER EXISTING MANUFACTURER LABELS.

CAUTION:

POWER TO THIS SERVICE IS ALSO SUPPLIED FROM THE FOLLOWING SOURCES WITH DISCONNECTS AS SHOWN

AT: ☒ MAIN SERVICE PANEL & UTILITY METER
AC-COMBINER BOX,AC-DISCONNECT UNFUSED,
AC-DISCONNECT FUSED,

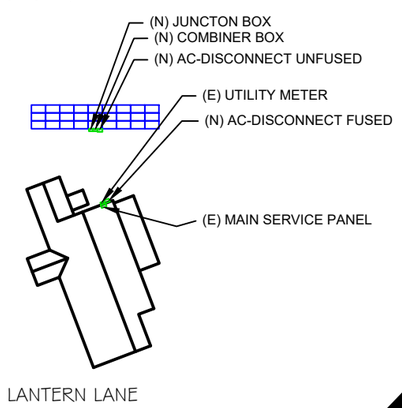

2779 LANTERN LANE, EAGLEVILLE, PA 19403, USA

LABEL LOCATION: MSP
CODE REF: NEC 2017 - 705.10

Superior Solar Design LLC

CONTRACTOR: SUPERIOR SOLAR DESIGN LLC
ADDRESS: 314 S HENDERSON RD SUITE G #350, KING OF PRUSSIA, PA 19406, USA
PHONE: W# 610.456.7069
M# 610.213.6154
CONTRACTOR LICENSE #: PA 109801 AND NJ13VHO8849800
EMAIL ID #: ddavis@superiorsolardesign.com

REVISIONS

DESCRIPTION	DATE	REV

SIGNATURE & SEAL

HOMEOWNER INFO

LAURE RITTIE
2779 LANTERN LANE,
EAGLEVILLE, PA 19403, USA

APN: 430006835007
EMAIL: laure.rittie@gmail.com
PHONE: 17348833574

SHEET NAME

PLACARDS

SHEET SIZE

ANSI B
11" X 17"

SHEET NUMBER

PV-6

powered by Q.ANTUM DUO Z

Q.PEAK DUO BLK ML-G10.a+

385-405

ENDURING HIGH PERFORMANCE

25 YR Warranty Product & Performance

EUPD RESEARCH TOP BRAND PV MODULES EUROPE 2021

Q CELLS Yield Security

THE IDEAL SOLUTION FOR:

Rooftop arrays on residential buildings

BREAKING THE 20% EFFICIENCY BARRIER
Q.ANTUM DUO Z Technology with zero gap cell layout boosts module efficiency up to 20.9%.

THE MOST THOROUGH TESTING PROGRAMME IN THE INDUSTRY
Q CELLS is the first solar module manufacturer to pass the most comprehensive quality programme in the industry: The new "Quality Controlled PV" of the independent certification institute TÜV Rheinland.

INNOVATIVE ALL-WEATHER TECHNOLOGY
Optimal yields, whatever the weather with excellent low-light and temperature behavior.

ENDURING HIGH PERFORMANCE
Long-term yield security with Anti LID Technology, Anti PID Technology[1], Hot-Spot Protect and Traceable Quality Tra.Q™.

EXTREME WEATHER RATING
High-tech aluminum alloy frame, certified for high snow (5400 Pa) and wind loads (4000 Pa).

A RELIABLE INVESTMENT
Inclusive 25-year product warranty and 25-year linear performance warranty[2].

[1] APT test conditions according to IEC/TS 62804-1:2015, method A (−1500 V, 96 h)
[2] See data sheet on rear for further information.

Engineered in Germany

Q CELLS

MECHANICAL SPECIFICATION

Format	74.0 in × 41.1 in × 1.26 in (including frame) (1879 mm × 1045 mm × 32 mm)
Weight	48.5 lbs (22.0 kg)
Front Cover	0.13 in (3.2 mm) thermally pre-stressed glass with anti-reflection technology
Back Cover	Composite film
Frame	Black anodized aluminum
Cell	6 × 22 monocrystalline Q.ANTUM solar half cells
Junction Box	2.09-3.98 in × 1.26-2.36 in × 0.59-0.71 in (53-101 mm × 32-60 mm × 15-18 mm), IP67, with bypass diodes
Cable	4 mm² Solar cable; (+) ≥49.2 in (1250 mm), (−) ≥49.2 in (1250 mm)
Connector	Stäubli MC4; IP68

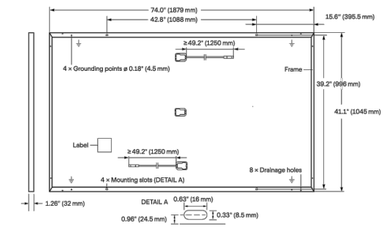

ELECTRICAL CHARACTERISTICS

POWER CLASS			385	390	395	400	405
MINIMUM PERFORMANCE AT STANDARD TEST CONDITIONS, STC[1] (POWER TOLERANCE +5 W / −0 W)							
Minimum: Power at MPP[1]	P_{MPP}	[W]	385	390	395	400	405
Minimum: Short Circuit Current[1]	I_{SC}	[A]	11.04	11.07	11.10	11.14	11.17
Minimum: Open Circuit Voltage[1]	V_{OC}	[V]	45.19	45.23	45.27	45.30	45.34
Minimum: Current at MPP	I_{MPP}	[A]	10.59	10.65	10.71	10.77	10.83
Minimum: Voltage at MPP	V_{MPP}	[V]	36.36	36.62	36.88	37.13	37.39
Minimum: Efficiency[1]	η	[%]	≥19.6	≥19.9	≥20.1	≥20.4	≥20.6
MINIMUM PERFORMANCE AT NORMAL OPERATING CONDITIONS, NMOT[2]							
Minimum: Power at MPP	P_{MPP}	[W]	288.8	292.6	296.3	300.1	303.8
Minimum: Short Circuit Current	I_{SC}	[A]	8.90	8.92	8.95	8.97	9.00
Minimum: Open Circuit Voltage	V_{OC}	[V]	42.62	42.65	42.69	42.72	42.76
Minimum: Current at MPP	I_{MPP}	[A]	8.35	8.41	8.46	8.51	8.57
Minimum: Voltage at MPP	V_{MPP}	[V]	34.59	34.81	35.03	35.25	35.46

[1] Measurement tolerances P_{MPP} ±3%; I_{SC}; V_{OC} ±5% at STC: 1000 W/m², 25±2 °C, AM 1.5 according to IEC 60904-3 • [2] 800 W/m², NMOT, spectrum AM 1.5

Q CELLS PERFORMANCE WARRANTY

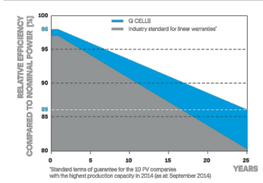

At least 98% of nominal power during first year. Thereafter max. 0.5% degradation per year. At least 93.5% of nominal power up to 10 years. At least 86% of nominal power up to 25 years.

All data within measurement tolerances. Full warranties in accordance with the warranty terms of the Q CELLS sales organisation of your respective country.

PERFORMANCE AT LOW IRRADIANCE

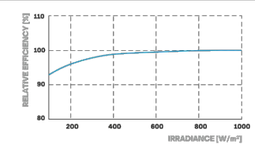

Typical module performance under low irradiance conditions in comparison to STC conditions (25 °C, 1000 W/m²)

TEMPERATURE COEFFICIENTS

Temperature Coefficient of I_{SC}	α	[%/K]	+0.04	Temperature Coefficient of V_{OC}	β	[%/K]	−0.27
Temperature Coefficient of P_{MPP}	γ	[%/K]	−0.34	Nominal Module Operating Temperature	NMOT	[°F]	109±5.4 (43±3 °C)

PROPERTIES FOR SYSTEM DESIGN

Maximum System Voltage V_{SYS}	[V]	1000 (IEC) / 1000 (UL)	PV module classification	Class II
Maximum Series Fuse Rating	[A DC]	20	Fire Rating based on ANSI / UL 61730	TYPE 2
Max. Design Load, Push / Pull[3]	[lbs/ft²]	75 (3600 Pa) / 55 (2660 Pa)	Permitted Module Temperature on Continuous Duty	−40 °F up to +185 °F (−40 °C up to +85 °C)
Max. Test Load, Push / Pull[3]	[lbs/ft²]	113 (5400 Pa) / 84 (4000 Pa)		

[3] See Installation Manual

QUALIFICATIONS AND CERTIFICATES

UL 61730, CE-compliant, Quality Controlled PV - TÜV Rheinland, IEC 61215:2016, IEC 61730:2016, U.S. Patent No. 9,893,215 (solar cells), QCPV Certification ongoing.

PACKAGING INFORMATION

Horizontal packaging	76.4 in 1940 mm	43.3 in 1100 mm	48.0 in 1220 mm	1656 lbs 751 kg	24 pallets	24 pallets	32 modules

Note: Installation instructions must be followed. See the installation and operating manual or contact our technical service department for further information on approved installation and use of this product.

Hanwha Q CELLS America Inc.
400 Spectrum Center Drive, Suite 1400, Irvine, CA 92618, USA | **TEL** +1 949 748 59 96 | **EMAIL** inquiry@us.q-cells.com | **WEB** www.q-cells.us

Specifications subject to technical changes © Q CELLS Q.PEAK DUO BLK ML-G10.a+_385-405_2021-05_Rev01_NA

Superior Solar Design LLC

CONTRACTOR: SUPERIOR SOLAR DESIGN LLC
ADDRESS: 314 S HENDERSON RD SUITE G #350, KING OF PRUSSIA, PA 19406, USA
PHONE: W# 610.456.7069
M# 610.213.6154
CONTRACTOR LICENSE #: PA 109801 AND NJ13VHO8849800
EMAIL ID #: ddavis@superiorsolardesign.com

REVISIONS

DESCRIPTION	DATE	REV

SIGNATURE & SEAL

HOMEOWNER INFO

LAURE RITTIE
2779 LANTERN LANE,
EAGLEVILLE, PA 19403, USA

APN: 430006835007
EMAIL: laure.rittie@gmail.com
PHONE: 17348833574

SHEET NAME
EQUIPMENT SPECIFICATION

SHEET SIZE
ANSI B
11" X 17"

SHEET NUMBER
PV-7

ENPHASE.

DATA SHEET

IQ8 and IQ8+ Microinverters

Our newest IQ8 Microinverters are the industry's first microgrid-forming, software-defined microinverters with split-phase power conversion capability to convert DC power to AC power efficiently. The brain of the semiconductor-based microinverter is our proprietary application-specific integrated circuit (ASIC) which enables the microinverter to operate in grid-tied or off-grid modes. This chip is built in advanced 55nm technology with high speed digital logic and has super-fast response times to changing loads and grid events, alleviating constraints on battery sizing for home energy systems.

Part of the Enphase Energy System, IQ8 Series Microinverters integrate with the Enphase IQ Battery, Enphase IQ Gateway, and the Enphase App monitoring and analysis software.

Enphase 25 year limited warranty

IQ8 Series Microinverters redefine reliability standards with more than one million cumulative hours of power-on testing, enabling an industry-leading limited warranty of up to 25 years.

Connect PV modules quickly and easily to IQ8 Series Microinverters using the included Q-DCC-2 adapter cable with plug-n-play MC4 connectors.

UL CERTIFIED SAFETY

IQ8 Series Microinverters are UL Listed as PV Rapid Shut Down Equipment and conform with various regulations, when installed according to manufacturer's instructions.

© 2021 Enphase Energy. All rights reserved. Enphase, the Enphase logo, IQ8 microinverters, and other names are trademarks of Enphase Energy, Inc. Data subject to change.

IQ8SP-DS-0002-01-EN-US-2021-10-19

Easy to install

- Lightweight and compact with plug-n-play connectors
- Power Line Communication (PLC) between components
- Faster installation with simple two-wire cabling

High productivity and reliability

- Produce power even when the grid is down
- More than one million cumulative hours of testing
- Class II double-insulated enclosure
- Optimized for the latest high-powered PV modules

Microgrid-forming

- Complies with the latest advanced grid support
- Remote automatic updates for the latest grid requirements
- Configurable to support a wide range of grid profiles
- Meets CA Rule 21 (UL 1741-SA) requirements

IQ8 and IQ8+ Microinverters

INPUT DATA (DC)		IQ8-60-2-US	IQ8PLUS-72-2-US
Commonly used module pairings[1]	W	235 – 350	235 – 440
Module compatibility		60-cell/120 half-cell	60-cell/120 half-cell and 72-cell/144 half-cell
MPPT voltage range	V	27 – 37	29 – 45
Operating range	V	25 – 48	25 – 58
Min/max start voltage	V	30 / 48	30 / 58
Max input DC voltage	V	50	60
Max DC current[2] [module Isc]	A	15	
Overvoltage class DC port		II	
DC port backfeed current	mA	0	
PV array configuration		1x1 Ungrounded array; No additional DC side protection required; AC side protection requires max 20A per branch circuit	
OUTPUT DATA (AC)		**IQ8-60-2-US**	**IQ8PLUS-72-2-US**
Peak output power	VA	245	300
Max continuous output power	VA	240	290
Nominal (L-L) voltage/range[3]	V	240 / 211 – 264	
Max continuous output current	A	1.0	1.21
Nominal frequency	Hz	60	
Extended frequency range	Hz	50 – 68	
Max units per 20 A (L-L) branch circuit[4]		16	13
Total harmonic distortion		<5%	
Overvoltage class AC port		III	
AC port backfeed current	mA	30	
Power factor setting		1.0	
Grid-tied power factor (adjustable)		0.85 leading – 0.85 lagging	
Peak efficiency	%	97.5	97.6
CEC weighted efficiency	%	97	97
Night-time power consumption	mW	60	
MECHANICAL DATA			
Ambient temperature range		-40°C to +60°C (-40°F to +140°F)	
Relative humidity range		4% to 100% (condensing)	
DC Connector type		MC4	
Dimensions (HxWxD)		212 mm (8.3") x 175 mm (6.9") x 30.2 mm (1.2")	
Weight		1.08 kg (2.38 lbs)	
Cooling		Natural convection – no fans	
Approved for wet locations		Yes	
Acoustic noise at 1 m		<60 dBA	
Pollution degree		PD3	
Enclosure		Class II double-insulated, corrosion resistant polymeric enclosure	
Environ. category / UV exposure rating		NEMA Type 6 / outdoor	
COMPLIANCE			
Certifications		CA Rule 21 (UL 1741-SA), UL 62109-1, UL1741/IEEE1547, FCC Part 15 Class B, ICES-0003 Class B, CAN/CSA-C22.2 NO. 107.1-01 This product is UL Listed as PV Rapid Shut Down Equipment and conforms with NEC 2014, NEC 2017, and NEC 2020 section 690.12 and C22.1-2018 Rule 64-218 Rapid Shutdown of PV Systems, for AC and DC conductors, when installed according to manufacturer's instructions.	

(1) No enforced DC/AC ratio. See the compatibility calculator at https://link.enphase.com/module-compatibility (2) Maximum continuous input DC current is 10.6A (3) Nominal voltage range can be extended beyond nominal if required by the utility. (4) Limits may vary. Refer to local requirements to define the number of microinverters per branch in your area.

IQ8SP-DS-0002-01-EN-US-2021-10-19

Superior Solar Design LLC

CONTRACTOR: SUPERIOR SOLAR DESIGN LLC
ADDRESS: 314 S HENDERSON RD SUITE G #350, KING OF PRUSSIA, PA 19406, USA
PHONE: W# 610.456.7069
M# 610.213.6154
CONTRACTOR LICENSE #: PA 109801 AND NJ13VHO8849800
EMAIL ID #: ddavis@superiorsolardesign.com

REVISIONS

DESCRIPTION	DATE	REV

SIGNATURE & SEAL

HOMEOWNER INFO

LAURE RITTIE
2779 LANTERN LANE,
EAGLEVILLE, PA 19403, USA

APN: 430006835007
EMAIL: laure.rittie@gmail.com
PHONE: 17348833574

SHEET NAME
EQUIPMENT SPECIFICATION

SHEET SIZE
ANSI B
11" X 17"

SHEET NUMBER
PV-8

Data Sheet
Enphase Networking

IQ Combiner 4/4C

The **IQ Combiner 4/4C** with IQ Gateway and integrated LTE-M1 cell modem (included only with IQ Combiner 4C) consolidates interconnection equipment into a single enclosure. It streamlines IQ Microinverters and storage installations by providing a consistent, pre-wired solution for residential applications. It offers up to four 2-pole input circuits and Eaton BR series busbar assembly.

X-IQ-AM1-240-4C
X2-IQ-AM1-240-4C (IEEE 1547:2018)

X-IQ-AM1-240-4
X2-IQ-AM1-240-4 (IEEE 1547:2018)

Smart

- Includes IQ Gateway for communication and control
- Includes Mobile Connect cellular modem (CELLMODEM-M1-06-SP-05), included only with IQ Combiner 4C
- Includes solar shield to match Enphase IQ Battery aesthetics and deflect heat
- Supports Wi-Fi, Ethernet, or cellular connectivity
- Optional AC receptacle available for PLC bridge
- Provides production metering and consumption monitoring

Simple

- Mounts on single stud with centered brackets
- Supports bottom, back and side conduit entry
- Allows up to four 2-pole branch circuits for 240VAC plug-in breakers (not included)
- 80A total PV or storage branch circuits

Reliable

- Durable NRTL-certified NEMA type 3R enclosure
- Five-year limited warranty
- Two years labor reimbursement program coverage included for both the IQ Combiner SKU's
- UL listed
- X2-IQ-AM1-240-4 and X2-IQ-AM1-240-4C comply with IEEE 1547:2018 (UL 1741-SB, 3rd Ed.)

UL LISTED

To learn more about Enphase offerings, visit **enphase.com**
IQ-C-4-4C-DS-0103-EN-US-12-29-2022

ENPHASE.

IQ Combiner 4/4C

MODEL NUMBER	
IQ Combiner 4 X-IQ-AM1-240-4 X2-IQ-AM1-240-4 (IEEE 1547:2018)	IQ Combiner 4 with IQ Gateway printed circuit board for integrated revenue grade PV production metering (ANSI C12.20 ± 0.5%) and consumption monitoring (± 2.5%). Includes a silver solar shield to match the IQ Battery and IQ System Controller 2 and to deflect heat.
IQ Combiner 4C X-IQ-AM1-240-4C X2-IQ-AM1-240-4C (IEEE 1547:2018)	IQ Combiner 4C with IQ Gateway printed circuit board for integrated revenue grade PV production metering (ANSI C12.20 ± 0.5%) and consumption monitoring (± 2.5%). Includes Mobile Connect cellular modem (CELLMODEM-M1-06-SP-05), a plug-and-play industrial-grade cell modem for systems up to 60 microinverters. (Available in the US, Canada, Mexico, Puerto Rico, and the US Virgin Islands, where there is adequate cellular service in the installation area.) Includes a silver solar shield to match the IQ Battery and IQ System Controller and to deflect heat.
ACCESSORIES AND REPLACEMENT PARTS	(not included, order separately)
Supported microinverters	IQ6, IQ7, and IQ8. (Do not mix IQ6/7 Microinverters with IQ8)
Communications Kit COMMS-CELLMODEM-M1-06 CELLMODEM-M1-06-SP-05 CELLMODEM-M1-06-AT-05	 - Includes COMMS-KIT-01 and CELLMODEM-M1-06-SP-05 with 5-year Sprint data plan - 4G based LTE-M1 cellular modem with 5-year Sprint data plan - 4G based LTE-M1 cellular modem with 5-year AT&T data plan
Circuit Breakers BRK-10A-2-240V BRK-15A-2-240V BRK-20A-2P-240V BRK-15A-2P-240V-B BRK-20A-2P-240V-B	Supports Eaton BR210, BR215, BR220, BR230, BR240, BR250, and BR260 circuit breakers. Circuit breaker, 2 pole, 10A, Eaton BR210 Circuit breaker, 2 pole, 15A, Eaton BR215 Circuit breaker, 2 pole, 20A, Eaton BR220 Circuit breaker, 2 pole, 15A, Eaton BR215B with hold down kit support Circuit breaker, 2 pole, 20A, Eaton BR220B with hold down kit support
XA-SOLARSHIELD-ES	Replacement solar shield for IQ Combiner 4/4C
XA-PLUG-120-3	Accessory receptacle for Power Line Carrier in IQ Combiner 4/4C (required for EPLC-01)
X-IQ-NA-HD-125A	Hold-down kit for Eaton circuit breaker with screws
Consumption monitoring CT (CT-200-SPLIT/CT-200-CLAMP)	A pair of 200A split core current transformers
ELECTRICAL SPECIFICATIONS	
Rating	Continuous duty
System voltage	120/240VAC, 60 Hz
Eaton BR series busbar rating	125A
Max. continuous current rating	65A
Max. continuous current rating (input from PV/storage)	64A
Max. fuse/circuit rating (output)	90A
Branch circuits (solar and/or storage)	Up to four 2-pole Eaton BR series Distributed Generation (DG) breakers only (not included)
Max. total branch circuit breaker rating (input)	80A of distributed generation/95A with IQ Gateway breaker included
IQ Gateway breaker	10A or 15A rating GE/Siemens/Eaton included
Production metering CT	200A solid core pre-installed and wired to IQ Gateway
MECHANICAL DATA	
Dimensions (WxHxD)	37.5 cm x 49.5 cm x 16.8 cm (14.75 in x 19.5 in x 6.63 in). Height is 53.5 cm (21.06 in) with mounting brackets.
Weight	7.5 kg (16.5 lbs)
Ambient temperature range	-40°C to +46°C (-40°F to 115°F)
Cooling	Natural convection, plus heat shield
Enclosure environmental rating	Outdoor, NRTL-certified, NEMA type 3R, polycarbonate construction
Wire sizes	• 20A to 50A breaker inputs: 14 to 4 AWG copper conductors • 60A breaker branch input: 4 to 1/0 AWG copper conductors • Main lug combined output: 10 to 2/0 AWG copper conductors • Neutral and ground: 14 to 1/0 copper conductors • Always follow local code requirements for conductor sizing.
Altitude	Up to 3,000 meters (9,842 feet)
INTERNET CONNECTION OPTIONS	
Integrated Wi-Fi	IEEE 802.11b/g/n
Cellular	CELLMODEM-M1-06-SP-05, CELLMODEM-M1-06-AT-05 (4G based LTE-M1 cellular modem). Note that an Mobile Connect cellular modem is required for all Enphase Energy System installations.
Ethernet	Optional, IEEE 802.3, Cat5E (or Cat6) UTP Ethernet cable (not included)
COMPLIANCE	
Compliance, IQ Combiner	CA Rule 21 (UL 1741-SA) IEEE 1547:2018 - UL 1741-SB, 3rd Ed. (X2-IQ-AM1-240-4 and X2-IQ-AM1-240-4C) CAN/CSA C22.2 No. 107.1, Title 47 CFR, Part 15, Class B, ICES 003 Production metering: ANSI C12.20 accuracy class 0.5 (PV production) Consumption metering: accuracy class 2.5
Compliance, IQ Gateway	UL 60601-1/CANCSA 22.2 No. 61010-1

© 2022 Enphase Energy. All rights reserved. Enphase, the Enphase logo, IQ Combiner 4/4C, and other names are trademarks of Enphase Energy, Inc. Data subject to change.

Superior Solar Design LLC

CONTRACTOR: SUPERIOR SOLAR DESIGN LLC
ADDRESS: 314 S HENDERSON RD SUITE G #350, KING OF PRUSSIA, PA 19406, USA
PHONE: W# 610.456.7069
M# 610.213.6154
CONTRACTOR LICENSE #: PA 109801 AND NJ13VHO8849800
EMAIL ID #: ddavis@superiorsolardesign.com

REVISIONS

DESCRIPTION	DATE	REV

SIGNATURE & SEAL

HOMEOWNER INFO

LAURE RITTIE
2779 LANTERN LANE,
EAGLEVILLE, PA 19403, USA

APN: 430006835007
EMAIL: laure.rittie@gmail.com
PHONE: 17348833574

SHEET NAME
EQUIPMENT SPECIFICATION

SHEET SIZE
ANSI B
11" X 17"

SHEET NUMBER
PV-9

Datasheet

IRONRIDGE

Ground Mount System

All-Terrain Mounting

The IronRidge® Ground Mount System combines our XR100® or XR1000® rails with locally-sourced steel pipes or mechanical tubing, to create a cost-effective structure capable of handling any site or terrain challenge.

Installation is simple with only a few structural components and no drilling, welding, or heavy machinery required. In addition, the system works with a variety of foundation options—including concrete piers, ground screws, helical or driven piles, and above-ground ballast blocks.

Rugged Construction
Engineered steel and aluminum components ensure durability.

PE Certified
Pre-stamped engineering letters available in most states.

UL 2703 Listed System
Meets newest effective UL 2703 standard.

Design Software
Online tool generates engineering values and bill of materials.

Flexible Architecture
Multiple foundation and array configuration options.

25-Year Warranty
Products guaranteed to be free of impairing defects.

Datasheet

360° Product Tour
Visit ironridge.com

Substructure

Top Caps

Connect vertical piers with cross pipes or tubing.

Bonded Rail Connectors

Attach and bond XR Rails® to cross pipes or tubing.

Diagonal Braces

Optional brace provides additional support.

Cross Pipe & Piers

Steel pipes or mechanical tubing for substructure.

Rail Assembly

XR100® & XR1000® Rails

Curved XR Rails® increase spanning capabilities.

UFO®

Universal Fastening Objects bond modules to rails.

Stopper Sleeves

Snap onto the UFO® to turn into a bonded end clamp.

CAMO

Bond modules to rails while staying completely hidden.

Resources

Design Assistant
Go from rough layout to fully engineered system. For free.
Go to ironridge.com/design

NABCEP Certified Training
Earn free continuing education credits, while learning more about our systems.
Go to ironridge.com/training

© 2023 IronRidge, Inc. All rights reserved. U.S. Patents: #8,695,290; #9,819,303; #9,865,938; Others Pending. Version 1.51

Superior Solar Design LLC

CONTRACTOR: SUPERIOR SOLAR DESIGN LLC
ADDRESS: 314 S HENDERSON RD SUITE G #350, KING OF PRUSSIA, PA 19406, USA
PHONE: W# 610.456.7069
M# 610.213.6154
CONTRACTOR LICENSE #: PA 109801 AND NJ13VHO8849800
EMAIL ID #: ddavis@superiorsolardesign.com

REVISIONS

DESCRIPTION	DATE	REV

SIGNATURE & SEAL

HOMEOWNER INFO

LAURE RITTIE
2779 LANTERN LANE,
EAGLEVILLE, PA 19403, USA

APN: 430006835007
EMAIL: laure.rittie@gmail.com
PHONE: 17348833574

SHEET NAME
EQUIPMENT SPECIFICATION

SHEET SIZE
ANSI B
11" X 17"

SHEET NUMBER
PV-10

Laure Rittie (#1221538)
ground based

IRONRIDGE
28357 INDUSTRIAL BLVD., HAYWARD, CA 94545

Project Details			
Name	Laure Rittie	**Date**	08/28/2023
Location	2779 Lantern Lane, Eagleville, PA 19403	**ASCE code**	7.16
Total modules	27	**Wind speed**	120 mph
Module	Hanwha Q.Cells: Q.PEAK DUO ML-G10.a+ 400 (32mm)	**Snow load**	30 psf
Dimensions	Dimensions: 73.98" x 41.14" x 1.26" (1879.0mm x 1045.0mm x 32.0mm)	**Wind exposure**	C
Total watts	10,800 kW	**Piers**	16
		Concrete	5.38 yd³
Inter sub-array spacing	188.0" *Calculated using solar azimuth of -41.88° and solar elevation of 13.91° at 9AM (America/New_York) on the winter solistice.*		

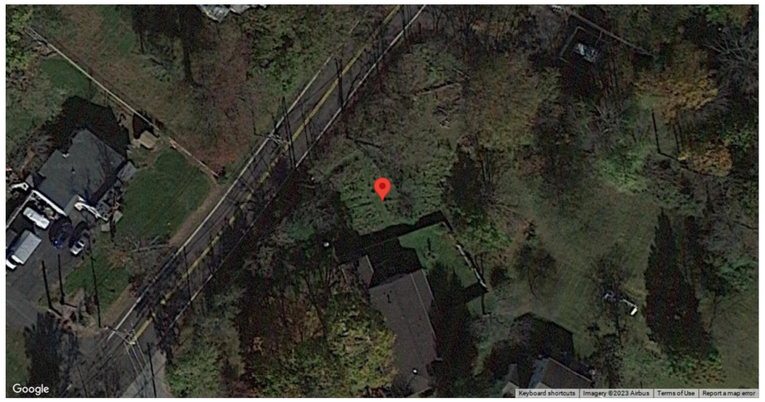

Substructure & Foundation			
Tilt	30°	**South facing grade**	0°
Pipe/tubing diameter	3"	**Soil class**	4
Foundation type	Concrete	**Hole diameter**	16"

Laure Rittie (#1221538)
ground based

IRONRIDGE
28357 INDUSTRIAL BLVD., HAYWARD, CA 94545

Bill of Materials		
Part	**Spares**	**Total Qty**
Rails		
XR-100-132A XR100, Rail 132" Clear *** [Custom Length] Please check with your distributor for availability.**	0	27
Clamps & Grounding		
UFO-CL-01-A1 Universal Module Clamp, Clear	0	108
UFO-STP-32MM-M1 Stopper Sleeve, 32MM, Mill	0	54
XR-LUG-03-A1 Grounding Lug, Low Profile	0	1
Substructure		
70-0300-SGA SGA Top Cap at 3"	0	16
GM-BRC3-01-M1 Ground Mount Bonded Rail Connector - 3"	0	54

Laure Rittie (#1221538)
ground based

IRONRIDGE
28357 INDUSTRIAL BLVD., HAYWARD, CA 94545

Sub array #1					
** IronRidge engineering requires a 3rd rail for each column in this array due to the project parameters and site conditions.*					
Rows	3	**Columns**	9	**# Arrays**	1
Area	55' 9" (EW) × 10' 6" (NS)	**Rail type**	XR100	**Diagonal bracing**	no
E/W spacing	7' 10"	**Rail cantilever**	1' 2"	**Pipe cantilever**	7"
Piers/array	16	**Total south piers**	8 (6' 8")	**Total north piers**	8 (11')
Total cross pipes	2 (55' 9")	**Total pipe length**	253' 1"		
Shear	1,532 lbs	**Moment**	3,830 ft-lbs	**Uplift**	-1,428 lbs

Laure Rittie (#1221538)
ground based

IRONRIDGE
28357 INDUSTRIAL BLVD., HAYWARD, CA 94545

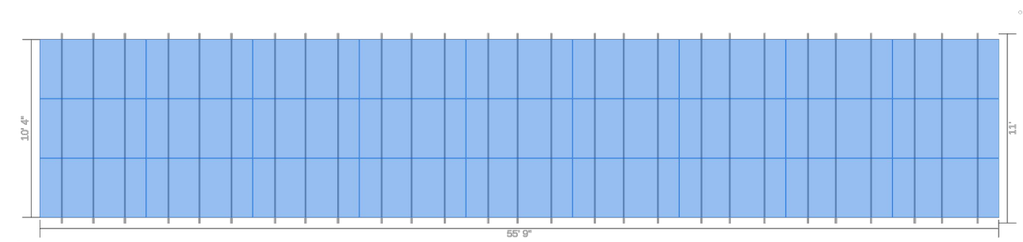

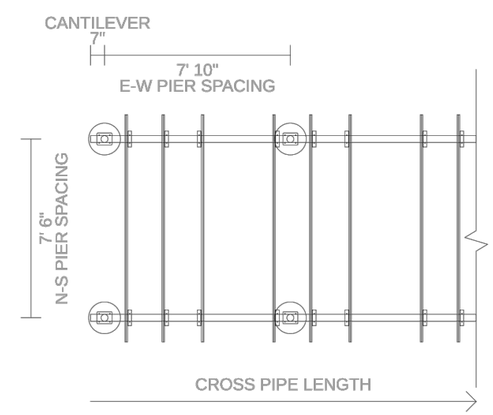

Superior Solar Design LLC

CONTRACTOR: SUPERIOR SOLAR DESIGN LLC
ADDRESS: 314 S HENDERSON RD SUITE G #350, KING OF PRUSSIA, PA 19406, USA
PHONE: W# 610.456.7069
M# 610.213.6154
CONTRACTOR LICENSE #: PA 109801 AND NJ13VHO8849800
EMAIL ID #: ddavis@superiorsolardesign.com

REVISIONS

DESCRIPTION	DATE	REV

SIGNATURE & SEAL

HOMEOWNER INFO

LAURE RITTIE
2779 LANTERN LANE,
EAGLEVILLE, PA 19403, USA

APN: 430006835007
EMAIL: laure.rittie@gmail.com
PHONE: 17348833574

SHEET NAME
EQUIPMENT SPECIFICATION

SHEET SIZE
ANSI B
11" X 17"

SHEET NUMBER
PV-11

Grounding Diagram

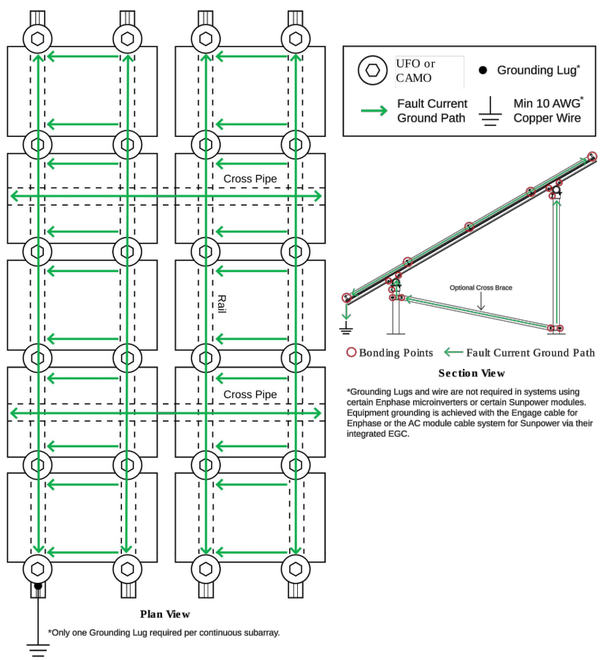

*Grounding Lugs and wire are not required in systems using certain Enphase microinverters or certain Sunpower modules. Equipment grounding is achieved with the Engage cable for Enphase or the AC module cable system for Sunpower via their integrated EGC.

*Only one Grounding Lug required per continuous subarray.

Laure Rittie (#1221538)
ground based

IRONRIDGE
28357 INDUSTRIAL BLVD., HAYWARD, CA 94545

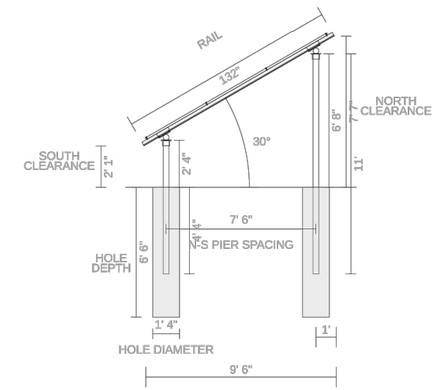

Pipe Fitting Detail

XR100 Rail

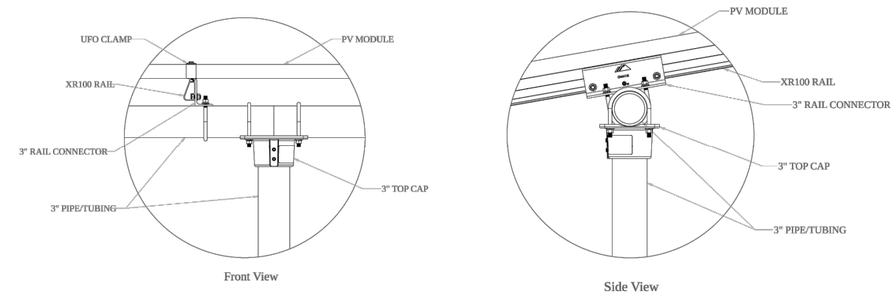

Clamp Detail

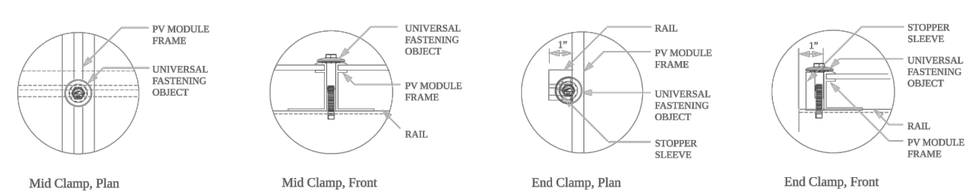

Superior Solar Design LLC

CONTRACTOR: SUPERIOR SOLAR DESIGN LLC
ADDRESS: 314 S HENDERSON RD SUITE G #350, KING OF PRUSSIA, PA 19406, USA
PHONE: W# 610.456.7069
M# 610.213.6154
CONTRACTOR LICENSE #: PA 109801 AND NJ13VHO8849800
EMAIL ID #: ddavis@superiorsolardesign.com

REVISIONS

DESCRIPTION	DATE	REV

SIGNATURE & SEAL

HOMEOWNER INFO

LAURE RITTIE
2779 LANTERN LANE,
EAGLEVILLE, PA 19403, USA

APN: 430006835007
EMAIL: laure.rittie@gmail.com
PHONE: 17348833574

SHEET NAME
EQUIPMENT SPECIFICATION

SHEET SIZE
ANSI B
11" X 17"

SHEET NUMBER
PV-12